CDC3RL02 Low Phase-Noise Two-Channel Clock Fan-Out Buffer

1 Features

- Low Additive Noise:
  - –149 dBc/Hz at 10-kHz Offset Phase Noise
  - 0.37 ps (RMS) Output Jitter
- Limited Output Slew Rate for EMI Reduction (1- to 5-ns Rise/Fall Time for 10-pF to 50-pF Loads)
- Adaptive Output Stage Controls Reflection
- Regulated 1.8-V Externally Available I/O Supply
- Ultra-Small 8-bump YFP 0.4-mm Pitch WCSP (0.8 mm × 1.6 mm)
- ESD Performance Exceeds JESD 22
  - 2000-V Human-Body Model (A114-A)
  - 1000-V Charged-Device Model (JESD22-C101-A Level III)

2 Applications

- Cellular Phones
- Global Positioning Systems (GPS)
- Wireless LAN
- FM Radio
- WiMAX
- W-BT

Simplified Block Diagram

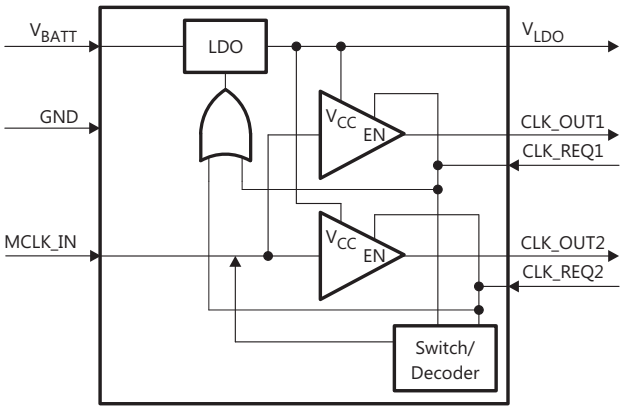

Copyright © 2017, Texas Instruments Incorporated

3 Description

The CDC3RL02 is a two-channel clock fan-out buffer and is ideal for use in portable end-equipment, such as mobile phones, that require clock buffering with minimal additive phase noise and fan-out capabilities. It buffers a single master clock, such as a temperature compensated crystal oscillator (TCXO) to multiple peripherals. The device has two clock request inputs (CLK_REQ1 and CLK_REQ2), each of which enable a single clock output.

The CDC3RL02 accepts square or sine waves at the master clock input (MCLK_IN), eliminating the need for an AC coupling capacitor. The smallest acceptable sine wave is a 0.3-V signal (peak-to-peak). CDC3RL02 has been designed to offer minimal channel-to-channel skew, additive output jitter, and additive phase noise. The adaptive clock output buffers offer controlled slew-rate over a wide capacitive loading range which minimizes EMI emissions, maintains signal integrity, and minimizes ringing caused by signal reflections on the clock distribution lines.

The CDC3RL02 has an integrated Low-Drop-Out (LDO) voltage regulator which accepts input voltages from 2.3 V to 5.5 V and outputs 1.8 V, 50 mA. This 1.8-V supply is externally available to provide regulated power to peripheral devices such as a TCXO.

The CDC3RL02 is offered in a 0.4-mm pitch wafer-level chip-scale (WCSP) package (0.8 mm × 1.6 mm) and is optimized for very low standby current consumption.

Device Information(1)

PART NUMBER	PACKAGE	BODY SIZE (NOM)
CDC3RL02	DSBGA (8)	0.80 mm × 1.60 mm

(1) For all available packages, see the orderable addendum at the end of the data sheet.

An IMPORTANT NOTICE at the end of this data sheet addresses availability, warranty, changes, use in safety-critical applications, intellectual property matters and other important disclaimers. PRODUCTION DATA.

Table of Contents

1 **Features** ... 1
2 **Applications** ... 1
3 **Description** ... 1
4 **Revision History** ... 2
5 **Device Comparison Table** ... 3
6 **Pin Configuration and Functions** ... 3
7 **Specifications** ... 4
7.1 Absolute Maximum Ratings ... 4
7.2 ESD Ratings ... 4
7.3 Recommended Operating Conditions ... 4
7.4 Thermal Information ... 5
7.5 Electrical Characteristics ... 5
7.6 Typical Characteristics ... 7
8 **Detailed Description** ... 9
8.1 Overview ... 9
8.2 Functional Block Diagram ... 9
8.3 Feature Description ... 9
8.4 Device Functional Modes ... 10
9 **Application and Implementation** ... 11
9.1 Application Information ... 11
9.2 Typical Application ... 12
10 **Power Supply Recommendations** ... 13
11 **Layout** ... 13
11.1 Layout Guidelines ... 13
11.2 Layout Example ... 13
12 **Device and Documentation Support** ... 14
12.1 Receiving Notification of Documentation Updates 14
12.2 Community Resources ... 14
12.3 Trademarks ... 14
12.4 Electrostatic Discharge Caution ... 14
12.5 Glossary ... 14
13 **Mechanical, Packaging, and Orderable Information** ... 14

4 Revision History

NOTE: Page numbers for previous revisions may differ from page numbers in the current version.

Changes from Revision E (August 2018) to Revision F	Page
• Changed MCLK_IN frequency maximum vale from: 52 MHz to: 54 MHz	5

Changes from Revision D (April 2017) to Revision E	Page
• Changed V_{LDO} test conditions to V_{IH} conditions in the *Electrical Characteristics* table	5
• Added a tablenote to the *Function Table*	10
• Added content to the *LDO* section	11
• Changed the last sentence in the *Detailed Design Procedure* section	12

Changes from Revision C (January 2016) to Revision D	Page
• Updated clock request descriptions in the *Pin Functions* table	3
• Added *Receiving Notification of Documentation Updates* section	14

Changes from Revision B (December 2015) to Revision C	Page
• Added the *Device Comparison Table*	3

Changes from Revision A (September 2015) to Revision B	Page
• Added *Thermal Information* table, *Overview*, *Feature Description* section, *Power Supply Recommendations* section, and *Layout* section	1

Changes from Original (November 2009) to Revision A	Page
• Formatted document to new standards.	1

Copyright © 2009–2019, Texas Instruments Incorporated

5 Device Comparison Table

T_A	PACKAGE (1)	ORDERABLE PART NUMBER	BACKSIDE COATING (2)
-40 C to 85 C	YFP	CDC3RL02BYFPR	Yes
-40 C to 85 C	YFP	CDC3RL02YFPR	No

(1) Package drawings, thermal data, and symbolization are available at www.ti.com/packaging.
(2) CSP (DSBGA) devices manufactured with backside coating have an increased resistance to cracking due to the increased physical strength of the package. Devices with backside coating are highly encouraged for new designs.

6 Pin Configuration and Functions

YFP Package
8-Pin DSBGA
Top View

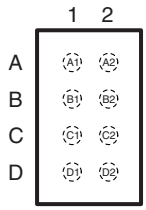

Pin Functions

PIN		I/O	DESCRIPTION
NAME	NO.		
V_{BATT}	A1	I	Input to internal LDO
CLK_OUT1	A2	O	Clock output 1
V_{LDO}	B1	O	1.8 V I/O supply for CDC3RL02 and external TCXO
CLK_REQ1	B2	I	Clock request 1 (from peripheral) for Clock output 1
MCLK_IN	C1	I	Master clock input
CLK_REQ2	C2	I	Clock request 2 (from peripheral) for Clock output 2
GND	D1	–	Ground
CLK_OUT2	D2	O	Clock output 2

YFP Package Pin Assignments

	1	2
A	V_{BATT}	CLK_OUT1
B	V_{LDO}	CLK_REQ1
C	MCLK_LIN	CLK_REQ2
D	GND	CLK_OUT2

Copyright © 2009–2019, Texas Instruments Incorporated

7 Specifications

7.1 Absolute Maximum Ratings

over operating free-air temperature range, unless otherwise noted. (1)

			MIN	MAX	UNIT
V_{BATT}	Voltage range (2)		–0.3	7	V
	Voltage range (3)	CLK_REQ_1/2, MCLK_IN	–0.3	V_{BATT} + 0.3	V
		V_{LDO}, CLK_OUT_1/2 (2)	–0.3	V_{BATT} + 0.3	
I_{IK}	Input clamp current at V_{BATT}, CLK_REQ_1/2, and MCLK_IN	V_I < 0		–50	mA
I_O	Continuous output current	CLK_OUT1/2		±20	mA
	Continuous current through GND, V_{BATT}, V_{LDO}			±50	mA
T_J	Operating virtual junction temperature		–40	150	°C
T_A	Operating ambient temperature range		–40	85	°C
T_{stg}	Storage temperature range		–55	150	°C

(1) Stresses beyond those listed under *Absolute Maximum Ratings* may cause permanent damage to the device. These are stress ratings only, which do not imply functional operation of the device at these or any other conditions beyond those indicated under *Recommended Operating Conditions*. Exposure to absolute-maximum-rated conditions for extended periods may affect device reliability.
(2) The input negative-voltage and output voltage ratings may be exceeded if the input and output current ratings are observed.
(3) All voltage values are with respect to network ground pin.

7.2 ESD Ratings

			VALUE	UNIT
$V_{(ESD)}$	Electrostatic discharge	Human-body model (HBM), per ANSI/ESDA/JEDEC JS-001 (1)	±2000	V
		Charged-device model (CDM), per JEDEC specification JESD22-C101 (2)	±1000	
		Machine Model	200	

(1) JEDEC document JEP155 states that 500-V HBM allows safe manufacturing with a standard ESD control process. Manufacturing with less than 500-V HBM is possible with the necessary precautions.
(2) JEDEC document JEP157 states that 250-V CDM allows safe manufacturing with a standard ESD control process. Manufacturing with less than 250-V CDM is possible with the necessary precautions.

7.3 Recommended Operating Conditions

See (1)

			MIN	MAX	UNIT
V_{BATT}	Input voltage to internal LDO		2.3	5.5	V
V_I	Input voltage	MCLK_IN, CLK_REQ1/2	0	1.89	V
V_O	Output voltage	CLK_OUT1/2	0	1.8	V
V_{IH}	High-level input voltage	CLK_REQ1/2	1.3	1.89	V
V_{IL}	Low-level input voltage	CLK_REQ1/2	0	0.5	V
I_{OH}	High-level output current, DC current		–8		mA
I_{OL}	Low-level output current, DC current			8	mA

(1) All unused inputs of the device must be held at V_{CC} or GND to ensure proper device operation. See the TI application report, *Implications of Slow or Floating CMOS Inputs*, SCBA004.

Copyright © 2009–2019, Texas Instruments Incorporated

7.4 Thermal Information

THERMAL METRIC[1]		CDC3RL02 YFP (TSSOP) 8 PINS	UNIT
$R_{\theta JA}$	Junction-to-ambient thermal resistance	107.8	°C/W
$R_{\theta JC(top)}$	Junction-to-case (top) thermal resistance	1.3	°C/W
$R_{\theta JB}$	Junction-to-board thermal resistance	18.1	°C/W
ψ_{JT}	Junction-to-top characterization parameter	4.5	°C/W
ψ_{JB}	Junction-to-board characterization parameter	18.1	°C/W

(1) For more information about traditional and new thermal metrics, see the *Semiconductor and IC Package Thermal Metrics* application report (SPRA953).

7.5 Electrical Characteristics

over operating free-air temperature range (unless otherwise noted)

PARAMETER		TEST CONDITIONS		MIN	TYP	MAX	UNIT
LDO							
V_{OUT}	LDO output voltage	I_{OUT} = 50 mA		1.71	1.8	1.89	V
C_{LDO}	External load capacitance			1		10	µF
$I_{OUT(SC)}$	Short circuit output current	R_L = 0 Ω			100		mA
$I_{OUT(PK)}$	Peak output current	V_{BATT} = 2.3 V, V_{LDO} = V_{OUT} – 5%				100	mA
PSR	Power supply rejection	V_{BATT} = 2.3 V, I_{OUT} = 2 mA,	f_{IN}= 217 Hz and 1 kHz	60			dB
			f_{IN}= 3.25 MHz	40			
t_{su}	LDO startup time	V_{BATT} = 2.3 V , C_{LDO} = 1 µF, CLK_REQ_n to V_{IH} = 1.71 V			0.2		ms
		V_{BATT} = 5.5 V , C_{LDO} = 10 µF, CLK_REQ_n to V_{IH} = 1.71 V				1	
POWER CONSUMPTION							
I_{SB}	Standby current	Device in standby (all $V_{CLK_REQ_n}$ = 0 V)			0.2	1	µA
I_{CCS}	Static current consumption	Device active but not switching			0.4	1	mA
I_{OB}	Output buffer average current	f_{IN} = 26 MHz, C_{LOAD} = 50 pF			4.2		mA
C_{PD}	Output power dissipation capacitance	f_{IN} = 26 MHz				44	pF
MCLK_IN INPUT							
I_I	MCLK_IN, CLK_REQ_1/2 leakage current	V_I = V_{IH} or GND				1	µA
C_I	MCLK_IN capacitance	f_{IN} = 26 MHz			4.75		pF
R_I	MCLK_IN impedance	f_{IN} = 26 MHz			6		kΩ
f_{IN}	MCLK_IN frequency range			10	26	54	MHz
MCLK_IN LVCMOS SOURCE							
	Additive phase noise	f_{IN} = 26 MHz, t_r/t_f ≤ 1 ns	1-kHz offset		–140		dBc/Hz
			10-kHz offset		–149		
			100-kHz offset		–153		
			1-MHz offset		–148		
	Additive jitter	f_{IN} = 26 MHz, V_{PP} = 0.8 V, BW = 10–5 MHz			0.37		ps (rms)
t_{DL}	MCLK_IN to CLK_OUT_n propagation delay				11		ns
DC_L	Output duty cycle	f_{IN} = 26 MHz, DC_{IN} = 50%		45%	50%	55%	

Electrical Characteristics (continued)

over operating free-air temperature range (unless otherwise noted)

PARAMETER		TEST CONDITIONS		MIN	TYP	MAX	UNIT
MCLK_IN SINUSOIDAL SOURCE							
V_{MA}	Input amplitude			0.3		1.8	V
	Additive phase noise	f_{IN} = 26 MHz, V_{MA} = 1.8 V_{PP}	1-kHz offset		–141		dBc/Hz
			10-kHz offset		–149		
			100-kHz offset		–152		
			1-MHz offset		–148		
		f_{IN} = 26 MHz, V_{MA} = 0.8 V_{PP}	1-kHz offset		–139		
			10-kHz offset		–146		
			100-kHz offset		–150		
			1-MHz offset		–146		
	Additive jitter	f_{IN} = 26 MHz, V_{MA} = 1.8 V_{PP}, BW = 10–5 MHz			0.41		ps (RMS)
t_{DS}	MCLK_IN to CLK_OUT_1/2 propagation delay				12		ns
DC_s	Output duty cycle	f_{IN} = 26 MHz, V_{MA} > 1.8 V_{PP}		45%	50%	55%	
CLK_OUT_N OUTPUTS							
t_r	20% to 80% rise time	C_L = 10 pF to 50 pF		1		5.2	ns
t_f	20% to 80% fall time	C_L = 10 pF to 50 pF		1		5.2	ns
t_{sk}	Channel-to-channel skew	C_L = 10 pF to 50 pF (C_{L1} = C_{L2})		–0.5		0.5	ns
V_{OH}	High-level output voltage	I_{OH} = –100 μA, reference to V_{LDO}		–0.1			V
		I_{OH} = –8 mA		1.2			
V_{OL}	Low-level output voltage	I_{OL} = 20 μA				0.2	V
		I_{OL} = 8 mA				0.55	

Copyright © 2009–2019, Texas Instruments Incorporated

7.6 Typical Characteristics

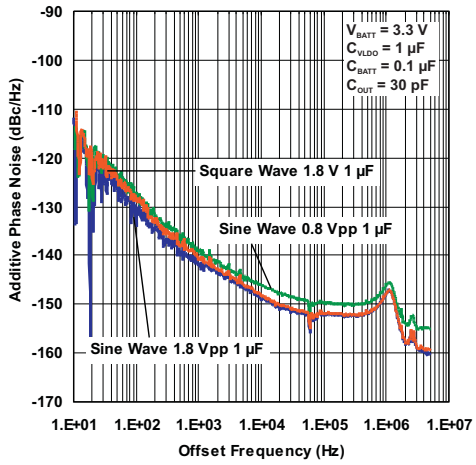

Figure 1. Additive Phase Noise vs Offset Frequency

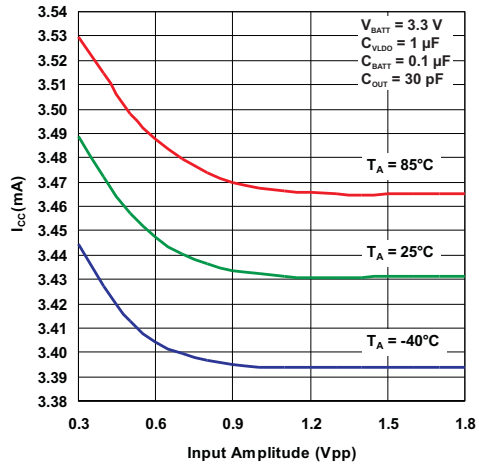

Figure 2. Supply Current vs Input Amplitude

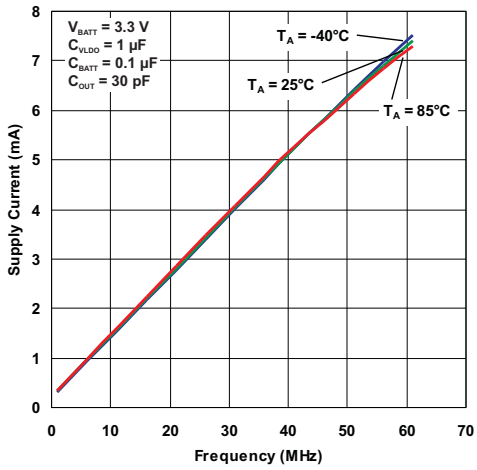

Figure 3. Supply Current vs Input Frequency

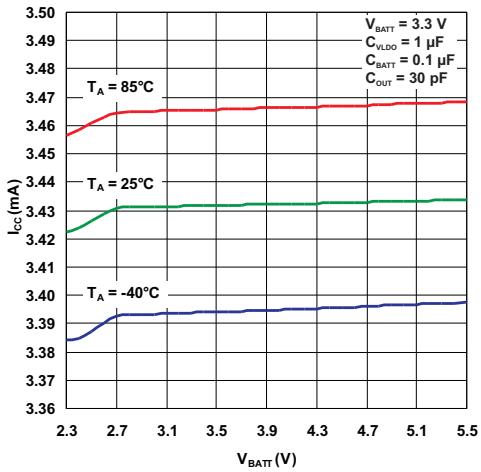

Figure 4. Supply Current vs Supply Voltage

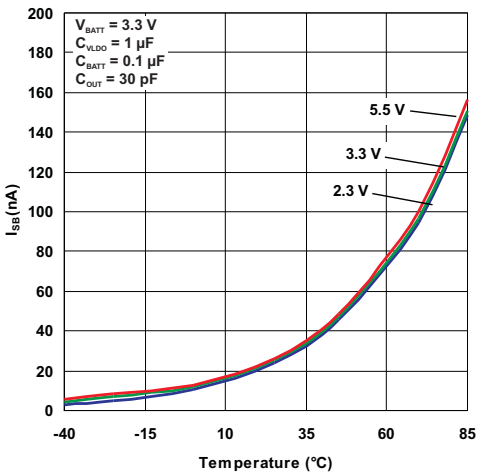

Figure 5. Standby Current vs Temperature

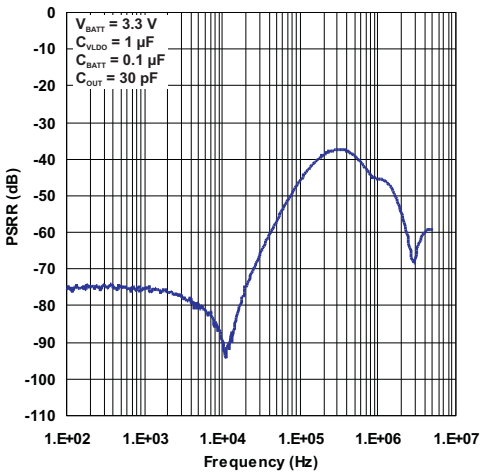

Figure 6. Power Supply Rejection vs Input Frequency

Typical Characteristics (continued)

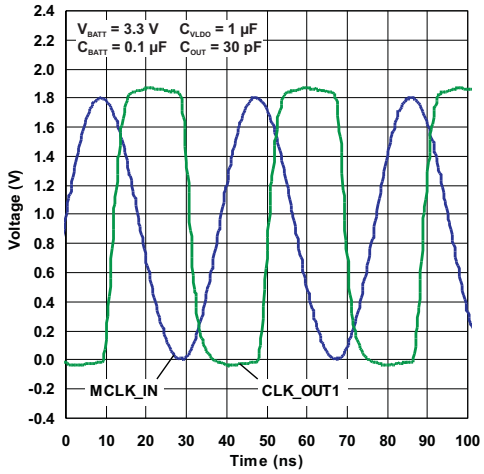

Figure 7. Sine-Wave Input vs Square-Wave Output

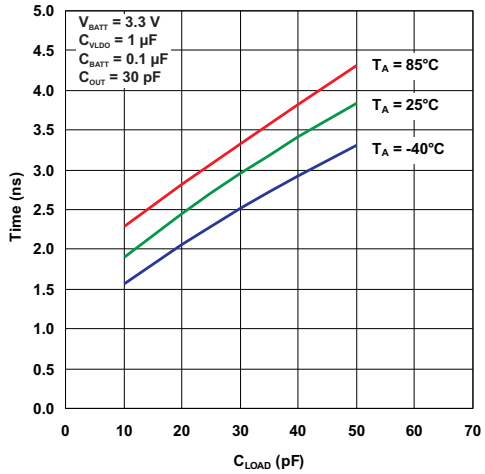

Figure 8. Rise Time vs Load

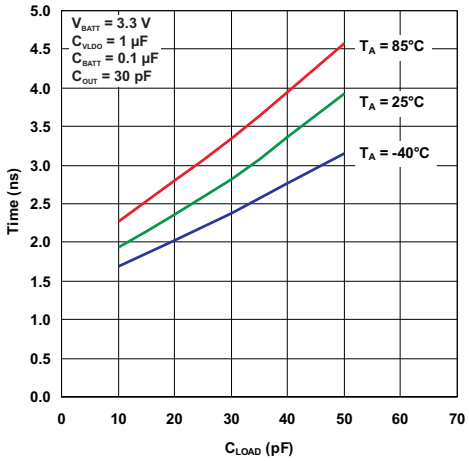

Figure 9. Fall Time vs Load

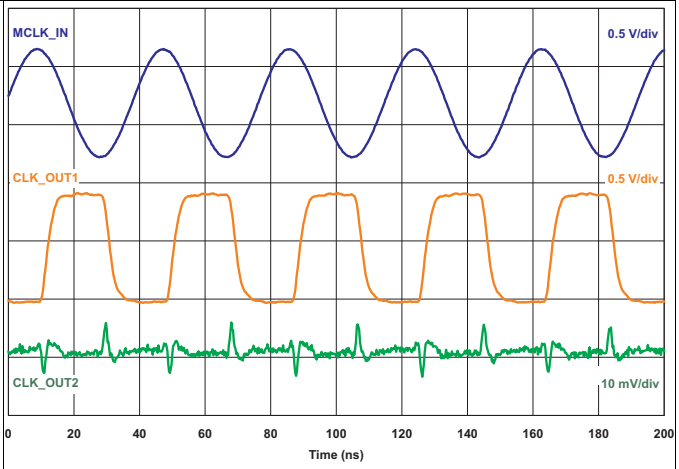

Figure 10. Digital Cross-Talk Scope Shot

Copyright © 2009–2019, Texas Instruments Incorporated

8 Detailed Description

8.1 Overview

The CDC3RL02 is a two-channel clock fan-out buffer and is ideal for use in portable end-equipment, such as mobile phones, that require clock buffering with minimal additive phase noise and fan-out capabilities. It buffers a single master clock, such as a temperature compensated crystal oscillator (TCXO) to multiple peripherals. The device has two clock request inputs (CLK_REQ1 and CLK_REQ2), each of which enable a single clock output.

The CDC3RL02 accepts square or sine waves at the master clock input (MCLK_IN), eliminating the need for an AC coupling capacitor. The smallest acceptable sine wave is a 0.3-V signal (peak-to-peak). CDC3RL02 has been designed to offer minimal channel-to-channel skew, additive output jitter, and additive phase noise. The adaptive clock output buffers offer controlled slew-rate over a wide capacitive loading range which minimizes EMI emissions, maintains signal integrity, and minimizes ringing caused by signal reflections on the clock distribution lines.

The CDC3RL02 has an integrated Low-Drop-Out (LDO) voltage regulator which accepts input voltages from 2.3 V to 5.5 V and outputs 1.8 V, 50 mA. This 1.8-V supply is externally available to provide regulated power to peripheral devices such as a TCXO.

8.2 Functional Block Diagram

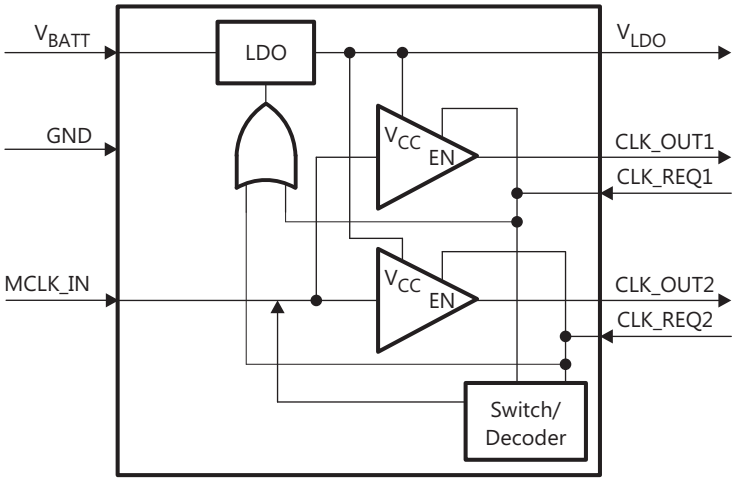

Copyright © 2017, Texas Instruments Incorporated

8.3 Feature Description

8.3.1 Low Additive Noise

The CDC3RL02 features –149 dBc/Hz at 10 kHz offset phase noise and 0.37 ps (RMS) of output jitter, to make sure that the buffered signals are clean.

8.3.2 Regulated 1.8-V Externally Available I/O Supply

The CDC3RL02 allows users to connect to the output of the internal LDO, for providing power to other ICs. For more information, refer to *LDO*.

8.3.3 Ultra-Small 8-bump YFP 0.4-mm Pitch WCSP Package

Using the ultra-small YFP package, the CDC3RL02 is very small and allows it to be placed on a board with minimum work.

8.4 Device Functional Modes

Table 1 is the function table for CDC3RL02.

Table 1. Function Table

INPUTS			OUTPUTS	
CLK_REQ1 (1)	CLK_REQ2 (1)	MCLK_IN	CLK_OUT1	CLK_OUT2
L	L	X	L	L
L	H	CLK	L	CLK
H	L	CLK	CLK	L
H	H	CLK	CLK	CLK

(1) If a CLK_OUT will always be enabled, it is acceptable to tie its CLK_REQ pin to an external 1.8 V source (not VLDO).

Copyright © 2009–2019, Texas Instruments Incorporated

9 Application and Implementation

NOTE

Information in the following applications sections is not part of the TI component specification, and TI does not warrant its accuracy or completeness. TI's customers are responsible for determining suitability of components for their purposes. Customers should validate and test their design implementation to confirm system functionality.

9.1 Application Information

9.1.1 Input Clock Squarer

Figure 11 shows the input stage of the CDC3RL02. The input signal at MCLK_IN can be a square wave or sine wave. C_{MCLK} is an internal AC coupling capacitor that allows a direct connection from the TCXO to the CDC3RL02 without an external capacitor.

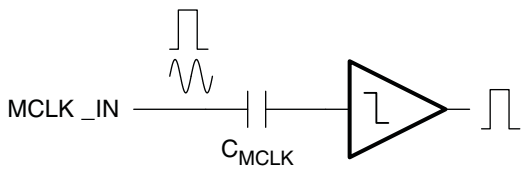

Figure 11. Input Stage with Internal AC Coupling Capacitor

Any external component added in the series path of the clock signal will potentially add phase noise and jitter. The error source associated with the internal decoupling capacitor is included in the specification of the CDC3RL02. The recommended clock frequency band of the CDC3RL02 is 10 MHz to 52 MHz for specified functionality. All performance metrics are specified at 26 MHz. The lowest acceptable sinusoidal signal amplitude is 0.8 V_{PP} for specified performance. Amplitudes as low as 0.3 V_{PP} are acceptable but with reduced phase-noise and jitter performance.

9.1.2 Output Stage

Each output drives 1.8-V LVCMOS levels. Adaptive output buffers limit the rise/fall time of the output to within 1 ns to 5 ns with load capacitance between 10 pF and 50 pF. Fast slew rates introduce EMI into the system. Each output buffer limits EMI by keeping the rise/fall time above 1 ns. Slow rise/fall times can induce additive phase noise and duty cycle errors in the load device. The output buffer limits these errors by keeping the rise/fall time below 5 ns. In addition, the output stage dynamically alters impedance based on the instantaneous voltage level of the output. This dynamic change limits reflections keeping the output signal monotonic during transitions. Each output is active low when not requested to avoid false clocking of the load device.

9.1.3 LDO

A low noise 1.8-V LDO is integrated to provide the I/O supply for the output buffers. The LDO output is externally available to power a clock source such as a TCXO. A clean supply is provided to the clock buffers and the clock source for optimum phase noise performance. The input range of the LDO allows the device to be powered directly from a single cell Li battery. The LDO is enabled by either of the CLK_REQ_N signals. When disabled, the device enters a low power shutdown mode consuming less than 1 μA from the battery. The LDO requires an output decoupling capacitor in the range of 1 μF to 10 μF with an equivalent series resistance (ESR) of at least 0.1 Ω for compensation and high-frequency PSR. This capacitor must stay within the specified range for capacitance and ESR over the entire operating temperature range. A ceramic capacitor can be used if a small external resistance is added in series with it to increase the effective ESR. An input bypass capacitor of 1 μF or larger is recommended.

9.2 Typical Application

The CDC3RL02 is ideal for use in mobile applications as shown in Figure 12. In this example, a single low noise TCXO system clock source is buffered to drive a mobile GPS receiver and WLAN transceiver. Each peripheral independently requests an active clock by asserting a single clock request line (CLK_REQ_1 or CLK_REQ_2). When both clock request lines are inactive, the CDC3RL02 enters a low current shutdown mode. In this mode, the LDO output, CLK_OUT_1, and CLK_OUT_2 are pulled to GND and the TCXO will be unpowered.

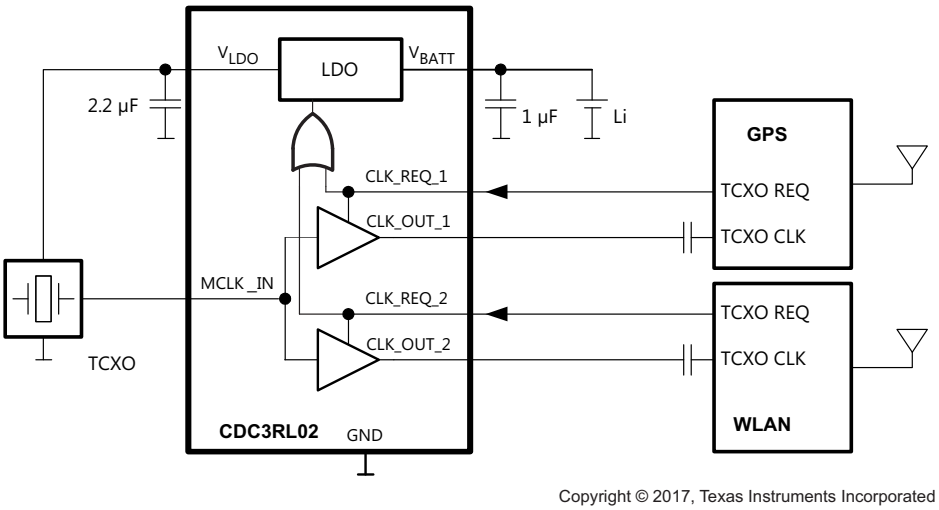

Figure 12. Mobile Application

When either peripheral requests the clock, the CDC3RL02 will enable the LDO and power the TCXO. The TCXO output (square wave, sine wave, or clipped sine wave) is converted to a square wave and buffered to the requested output.

9.2.1 Design Requirements

For the typical application, the user must know the following parameters.

Table 2. Design Parameters

PARAMETER	DESCRIPTION	EXAMPLE VALUE
V_{BATT}	Input voltage from battery or power supply	3.7 V
MCLK_IN	Input frequency from a TCXO	26 MHz

9.2.2 Detailed Design Procedure

The designer must make sure that all parameters are within the ranges specified in *Recommended Operating Conditions*.

Each device which receives a clock output from the CDC3RL02 should have the CLK request pin connected to the appropriate CLK_REQ pin on the CDC3RL02. This will enable the output buffer when a device requests the clock signal.

It is possible to have a control the outputs of the clock by using a GPIO from a controller to control the CLK_REQ pins.

If one of the outputs is unused, then tie the CLK_REQ and CLK_OUT pins to ground. If the user wants a CLK_OUT pin always enabled, it is acceptable to tie the paired CLK_REQ pin to an external 1.8-V source (not V_{LDO} because the LDO output is not enabled until at least one CLK_REQ pin is high).

Copyright © 2009–2019, Texas Instruments Incorporated

9.2.3 Application Curve

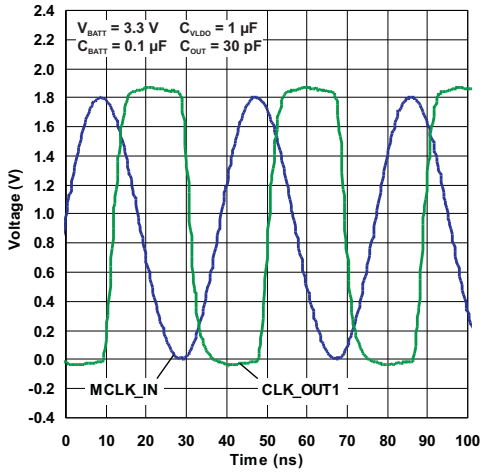

Figure 13. Sine Wave Input vs Output

10 Power Supply Recommendations

General power supply recommendations are to be considered for the CDC3RL02. These include:

- Decoupling capacitors placed close to the V_{BATT} pin of typical values (1 µF)
- V_{BATT} be within the recommended voltage range

11 Layout

11.1 Layout Guidelines

To ensure reliability of the device, following common printed-circuit board layout guidelines is recommended.

- Bypass capacitors should be used on power supplies and should be placed as close as possible to the V_{BATT} pin
- Short trace-lengths should be used to avoid excessive loading
- For improved performance on the clock output lines, use a ground trace on the sides of the clock trace to minimize crosstalk and EMI

11.2 Layout Example

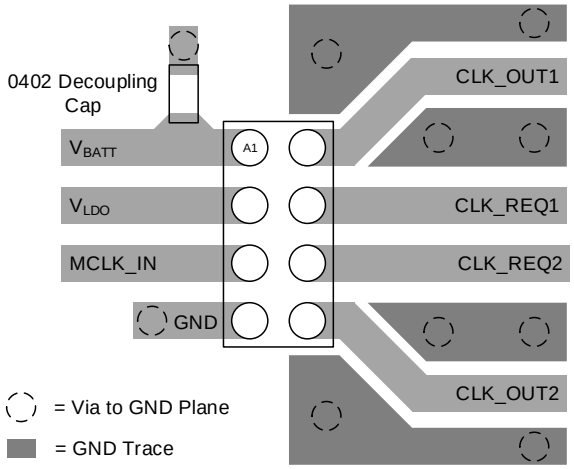

Figure 14. Example Layout for YFP Package

12 Device and Documentation Support

12.1 Receiving Notification of Documentation Updates

To receive notification of documentation updates, navigate to the device product folder on ti.com. In the upper right corner, click on *Alert me* to register and receive a weekly digest of any product information that has changed. For change details, review the revision history included in any revised document.

12.2 Community Resources

The following links connect to TI community resources. Linked contents are provided "AS IS" by the respective contributors. They do not constitute TI specifications and do not necessarily reflect TI's views; see TI's Terms of Use.

TI E2E™ Online Community ***TI's Engineer-to-Engineer (E2E) Community.*** Created to foster collaboration among engineers. At e2e.ti.com, you can ask questions, share knowledge, explore ideas and help solve problems with fellow engineers.

Design Support ***TI's Design Support*** Quickly find helpful E2E forums along with design support tools and contact information for technical support.

12.3 Trademarks

E2E is a trademark of Texas Instruments.
All other trademarks are the property of their respective owners.

12.4 Electrostatic Discharge Caution

These devices have limited built-in ESD protection. The leads should be shorted together or the device placed in conductive foam during storage or handling to prevent electrostatic damage to the MOS gates.

12.5 Glossary

SLYZ022 — *TI Glossary*.

This glossary lists and explains terms, acronyms, and definitions.

13 Mechanical, Packaging, and Orderable Information

The following pages include mechanical, packaging, and orderable information. This information is the most current data available for the designated devices. This data is subject to change without notice and revision of this document. For browser-based versions of this data sheet, refer to the left-hand navigation.

Copyright © 2009–2019, Texas Instruments Incorporated

PACKAGING INFORMATION

Orderable Device	Status (1)	Package Type	Package Drawing	Pins	Package Qty	Eco Plan (2)	Lead finish/ Ball material (6)	MSL Peak Temp (3)	Op Temp (°C)	Device Marking (4/5)	Samples
CDC3RL02BYFPR	ACTIVE	DSBGA	YFP	8	3000	Green (RoHS & no Sb/Br)	SNAGCU	Level-1-260C-UNLIM	-40 to 85	4LN	Samples
CDC3RL02YFPR	ACTIVE	DSBGA	YFP	8	3000	Green (RoHS & no Sb/Br)	SNAGCU	Level-1-260C-UNLIM	-40 to 85	4LN	Samples

(1) The marketing status values are defined as follows:
ACTIVE: Product device recommended for new designs.
LIFEBUY: TI has announced that the device will be discontinued, and a lifetime-buy period is in effect.
NRND: Not recommended for new designs. Device is in production to support existing customers, but TI does not recommend using this part in a new design.
PREVIEW: Device has been announced but is not in production. Samples may or may not be available.
OBSOLETE: TI has discontinued the production of the device.

(2) **RoHS:** TI defines "RoHS" to mean semiconductor products that are compliant with the current EU RoHS requirements for all 10 RoHS substances, including the requirement that RoHS substance do not exceed 0.1% by weight in homogeneous materials. Where designed to be soldered at high temperatures, "RoHS" products are suitable for use in specified lead-free processes. TI may reference these types of products as "Pb-Free".
RoHS Exempt: TI defines "RoHS Exempt" to mean products that contain lead but are compliant with EU RoHS pursuant to a specific EU RoHS exemption.
Green: TI defines "Green" to mean the content of Chlorine (Cl) and Bromine (Br) based flame retardants meet JS709B low halogen requirements of <=1000ppm threshold. Antimony trioxide based flame retardants must also meet the <=1000ppm threshold requirement.

(3) MSL, Peak Temp. - The Moisture Sensitivity Level rating according to the JEDEC industry standard classifications, and peak solder temperature.

(4) There may be additional marking, which relates to the logo, the lot trace code information, or the environmental category on the device.

(5) Multiple Device Markings will be inside parentheses. Only one Device Marking contained in parentheses and separated by a "~" will appear on a device. If a line is indented then it is a continuation of the previous line and the two combined represent the entire Device Marking for that device.

(6) Lead finish/Ball material - Orderable Devices may have multiple material finish options. Finish options are separated by a vertical ruled line. Lead finish/Ball material values may wrap to two lines if the finish value exceeds the maximum column width.

Important Information and Disclaimer: The information provided on this page represents TI's knowledge and belief as of the date that it is provided. TI bases its knowledge and belief on information provided by third parties, and makes no representation or warranty as to the accuracy of such information. Efforts are underway to better integrate information from third parties. TI has taken and continues to take reasonable steps to provide representative and accurate information but may not have conducted destructive testing or chemical analysis on incoming materials and chemicals. TI and TI suppliers consider certain information to be proprietary, and thus CAS numbers and other limited information may not be available for release.

In no event shall TI's liability arising out of such information exceed the total purchase price of the TI part(s) at issue in this document sold by TI to Customer on an annual basis.

TAPE AND REEL INFORMATION

REEL DIMENSIONS

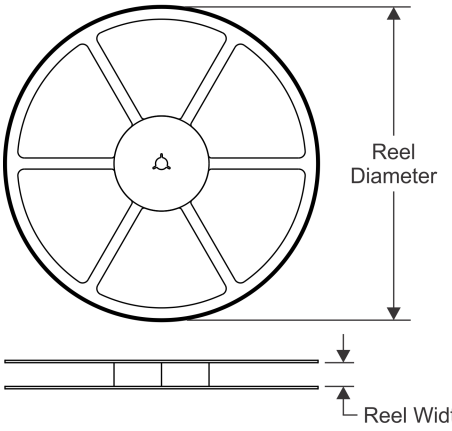

TAPE DIMENSIONS

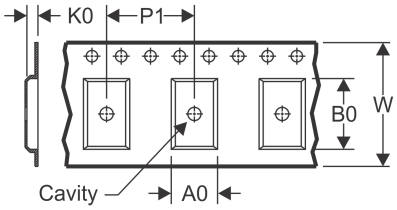

A0	Dimension designed to accommodate the component width
B0	Dimension designed to accommodate the component length
K0	Dimension designed to accommodate the component thickness
W	Overall width of the carrier tape
P1	Pitch between successive cavity centers

QUADRANT ASSIGNMENTS FOR PIN 1 ORIENTATION IN TAPE

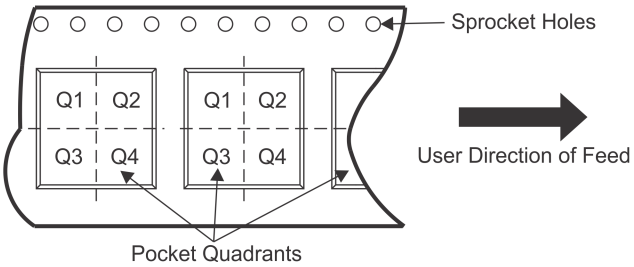

*All dimensions are nominal

Device	Package Type	Package Drawing	Pins	SPQ	Reel Diameter (mm)	Reel Width W1 (mm)	A0 (mm)	B0 (mm)	K0 (mm)	P1 (mm)	W (mm)	Pin1 Quadrant
CDC3RL02BYFPR	DSBGA	YFP	8	3000	178.0	9.2	0.9	1.75	0.6	4.0	8.0	Q1
CDC3RL02YFPR	DSBGA	YFP	8	3000	178.0	9.2	0.9	1.75	0.6	4.0	8.0	Q1

TAPE AND REEL BOX DIMENSIONS

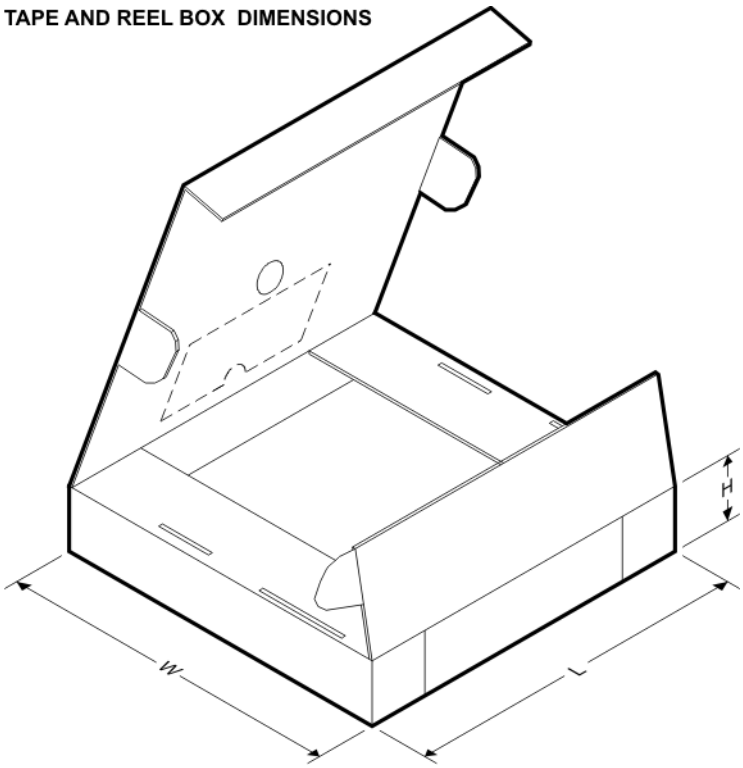

*All dimensions are nominal

Device	Package Type	Package Drawing	Pins	SPQ	Length (mm)	Width (mm)	Height (mm)
CDC3RL02BYFPR	DSBGA	YFP	8	3000	220.0	220.0	35.0
CDC3RL02YFPR	DSBGA	YFP	8	3000	220.0	220.0	35.0

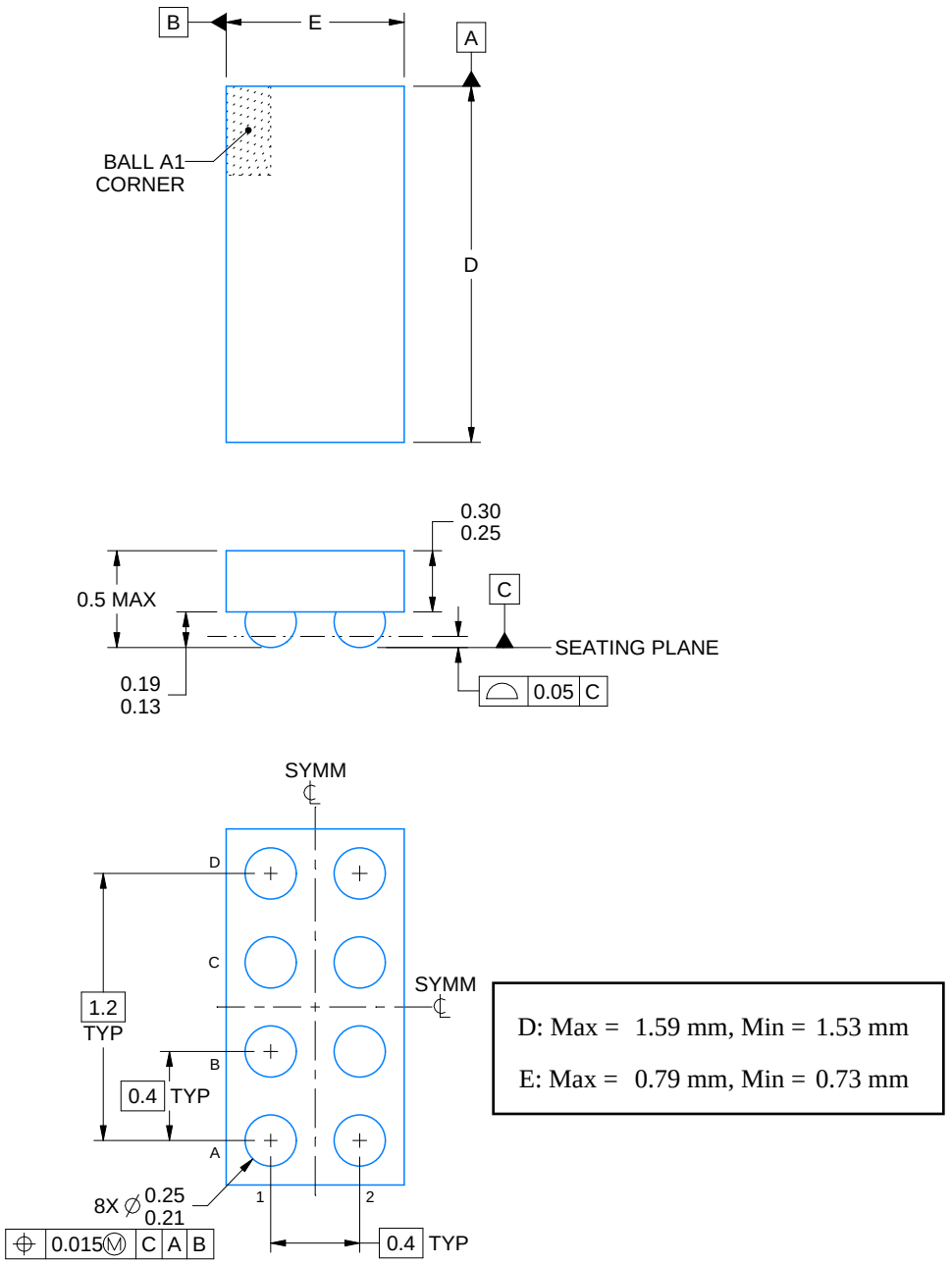

4225242/A 08/2019

NOTES:

1. All linear dimensions are in millimeters. Any dimensions in parenthesis are for reference only. Dimensioning and tolerancing per ASME Y14.5M.
2. This drawing is subject to change without notice.

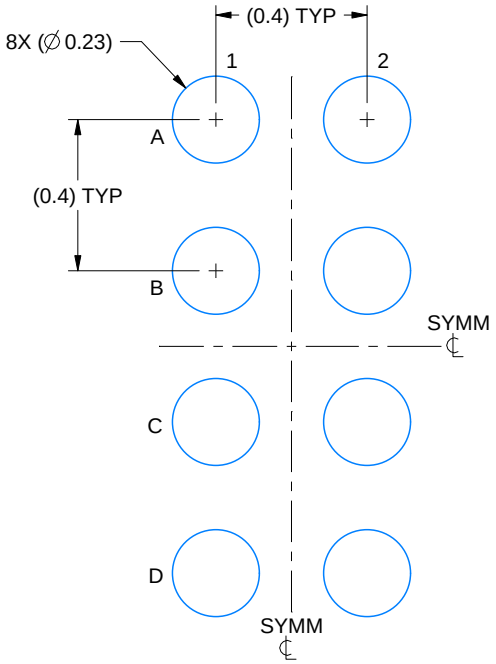

LAND PATTERN EXAMPLE
EXPOSED METAL SHOWN
SCALE: 50X

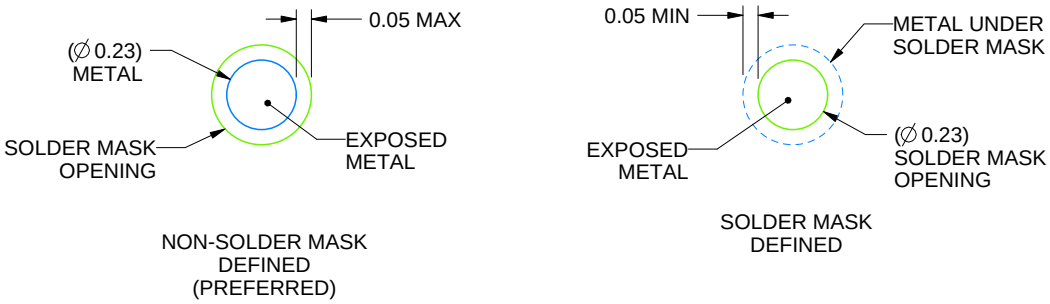

SOLDER MASK DETAILS
NOT TO SCALE

4225242/A 08/2019

NOTES: (continued)

3. Final dimensions may vary due to manufacturing tolerance considerations and also routing constraints.
   See Texas Instruments Literature No. SNVA009 (www.ti.com/lit/snva009).

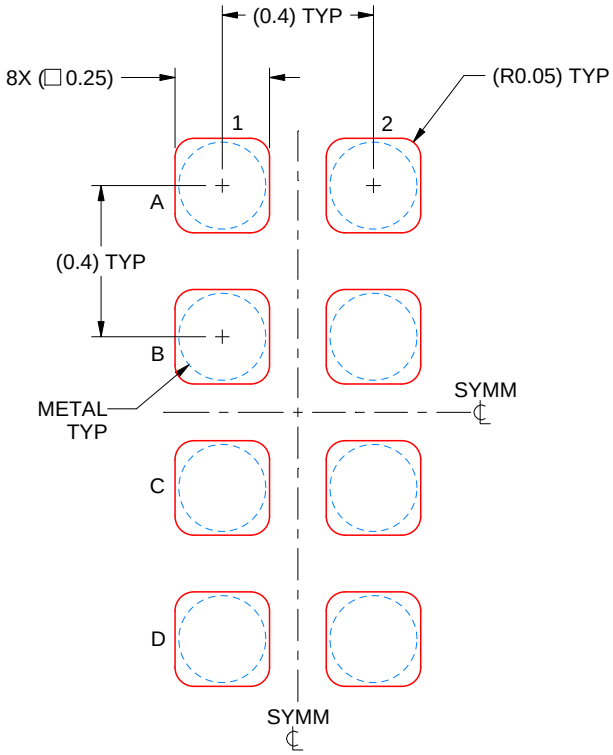

SOLDER PASTE EXAMPLE
BASED ON 0.1 mm THICK STENCIL
SCALE: 50X

4225242/A 08/2019

NOTES: (continued)

4. Laser cutting apertures with trapezoidal walls and rounded corners may offer better paste release.

IMPORTANT NOTICE AND DISCLAIMER

TI PROVIDES TECHNICAL AND RELIABILITY DATA (INCLUDING DATASHEETS), DESIGN RESOURCES (INCLUDING REFERENCE DESIGNS), APPLICATION OR OTHER DESIGN ADVICE, WEB TOOLS, SAFETY INFORMATION, AND OTHER RESOURCES “AS IS” AND WITH ALL FAULTS, AND DISCLAIMS ALL WARRANTIES, EXPRESS AND IMPLIED, INCLUDING WITHOUT LIMITATION ANY IMPLIED WARRANTIES OF MERCHANTABILITY, FITNESS FOR A PARTICULAR PURPOSE OR NON-INFRINGEMENT OF THIRD PARTY INTELLECTUAL PROPERTY RIGHTS.

These resources are intended for skilled developers designing with TI products. You are solely responsible for (1) selecting the appropriate TI products for your application, (2) designing, validating and testing your application, and (3) ensuring your application meets applicable standards, and any other safety, security, or other requirements. These resources are subject to change without notice. TI grants you permission to use these resources only for development of an application that uses the TI products described in the resource. Other reproduction and display of these resources is prohibited. No license is granted to any other TI intellectual property right or to any third party intellectual property right. TI disclaims responsibility for, and you will fully indemnify TI and its representatives against, any claims, damages, costs, losses, and liabilities arising out of your use of these resources.

TI’s products are provided subject to TI’s Terms of Sale (www.ti.com/legal/termsofsale.html) or other applicable terms available either on ti.com or provided in conjunction with such TI products. TI’s provision of these resources does not expand or otherwise alter TI’s applicable warranties or warranty disclaimers for TI products.

Mailing Address: Texas Instruments, Post Office Box 655303, Dallas, Texas 75265
Copyright © 2020, Texas Instruments Incorporated